VOLTAS LIMITED
ACnR Business Group

Air-Cooled Scroll Chillers

(11 TR - 110 TR)

A TATA Enterprise

INDEX

Nomenclature	2
Features Of Chiller	3
Technical Data	4
Description Of Microprocessor	6
Typical Schematic Refrigeration Piping Of Tandem Scroll Chiller	7
Point Load Diagram	8
GA Drawing ACDS011DMN	9
GA Drawing ACDS022DMN	10
GA Drawing ACDS033DMN	11
GA Drawing ACDS044DMN2x2	12
GA Drawing ACDS066DMN3x2	13
GA Drawing ACDS088DMN4x2	14
GA Drawing ACDS110DMN5x2	15
VSCADA Features & Setup	16

NOMENCLATURE

AC D S 011 D M N 3 x 2

- AC — Air Cooled
- D — DX Chiller
- S — Scroll Compressor
- 011 — Capacity Eg: 011- 11 TR
- D — D - Danfoss Compressor; C - Copeland Compressor
- M — M - Microprocessor Based Control Panel
- N — N - Standard; D - Dual Mode; A - BMS / VSCADA Compatible
- 3 — * No of circuit - 2,3,4
- 2 — * No of compressors per circuit

* For Tandem Compressors Only

Air-Cooled Chillers with Scroll Compressors

Features

The factory assembled Packaged Water Chilling units using best in class components. Available in higher range of capacity 11TR to 110TR. Single unit design with independent refrigerant circuits offers flexibility of operation at part load or under break down of circuit.

Compressors

- Imported Hermetic Scroll compressor from reputed manufacturer.
- Higher capacity scroll chillers are made using tandem scroll compressors with suction gas distribution restrictor which allows balanced operation of compressor.
- Enhanced reliability and extended life with no contact scroll design and a motor cooled by suction gas.
- Higher efficiency and less prone to damage due to liquid entering compressor.
- Sight glass and oil level adjustment port.
- Crankcase heaters are provided.

Condensors

- Compact coil design using latest and advanced inner grooved tubes with slotted louvered fins made on state-of the-art manufacturing equipment.
- Smallest footprint saves you space by V configuration of coil.
- Each coil pneumatically tested for 410 PSI G.
- High performance multiple fans of reputed International makes driven by Ip55 motors.

Chillers

- Manufactured incorporating latest technology from world renowned Standard Refrigeration, USA.
- State-of-the-art technology using most advanced high heat flux tubes & baffle design makes the unit highly compact and heat transfer efficient.

Insulation

- The evaporator and suction line are insulated with closed cell elastomeric rubber insulation.

Capacity Control

- Individual compressors are cycled On/Off in response to the chilled water outlet temperature. This ensures energy saving.
- For higher capacity models, fan cycling is an additional energy saving feature.

Microprocessor Control Panel

- This is provided with chiller Package as standard feature. Its details are provided separately.

Technical Data

ACDS SERIES*	011	022	033
NOMINAL CAPACITY**			
TR	11	22	33
KW	38.72	77.44	116.16
Allowable max. ambient temperature Deg C	43.313	43.33	43.33
Compressor No.	1	2	3
Capacity control steps %	100	100/50	100/66.7/33.3
Evaporator			
No.	1	1	1, 1
Inlet and Outlet connection sizes MM NB	65	80	65,80
Water flow rate US GPM	29.3	58.7	88.0
Water pressure frop PSI	2.06	3.39	2,06, 3.39
Condenser			
No.	1	1	1
Condenser fan diameter MM	610	800	800
No. of fans	2	2	2
Unit dimensions (in mm)			
Length	2500	2536	2536
Width	650	1270	1270
Height	1400	2323	2323
Op. Weight (approx.) KG	1210	1600	2100

* Full Model specification and option be specified as per nomenclature.
** Chiller performance at chiller in / out temperature of 12 / 7 deg C and ambient at 35 deg C.

Technical Data

044	066	088	110
44 154.88	66 232.32	88 309.76	110 387.2
43.33	43.33	43.33	43.33
4 100/75/50/25	6 100/83.3/66.7/50/ 33.3/16.7	8 100/87.5/75/62.5/37 5/12.5	10 5 100/90/70/50/30/10
1 100 117.3 3.60	1, 1 100,80 176.0 3.6, 3.39	2 100 234.7 3.6	2, 1 100, 80 293.3 3.6, 3.39
2 800 4	3 800 6	4 610 12	5 610 15
2850 2235 2445	3610 2235 2550	3810 2280 2240	4610 2280 2265
2800	4000	6000	6350

Features of Standard Microprocessor Panel

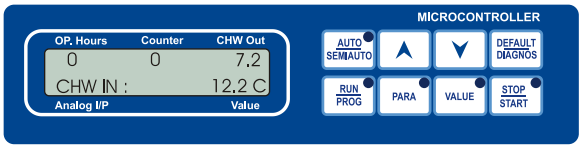

LC Display and key pad of Microprocessor

User-friendly operation

- Man machine interface with keypad & 32 characters LCD display.
- It gives visual annunciation for safety trips on LCD display.

Displays with diagnostic capabilities

- Digital Display of all vital parameters such as
  - Outlet temperature for chiller
  - Current
  - Voltage
  - Compressor run hours
- Diagnose mode for easy trouble shooting

Capacity Control

- Individual compressors are cycled On/Off in response to the chilled water outlet temperature.

Controls and Interlock

- Chilled water pump starting interlock.
- The safety controls are set at factory while operating controls are field adjustable and need to be set based on actual operating requirements.

Safety & Protection

- Microcomputer Motor Protection Device (μMPD) and Voltage Protection Device (μVPD) protect compressors from phase unbalance, current unbalance, phase loss, phase reversal, overload, under/over voltage and supply failure.
- Safety features available using accurate temperature sensors & pressure switch which protects the system from :
  - High winding temperature
  - Freezing
  - High Pressure
  - Low Pressure
  - Low Chilled Water Outlet Temperature
  - Low Water Flow in Chiller
  - Recycling of compressors
  - Sensor error

Differential Pressure Switch

- Compressor lead, lag, programmed to safe guard motors by running them for equal hours.

Other Options

- Unless & otherwise specified chiller shall be provided with standard microprocessor.
- Dual mode chillers for Thermal storage systems.

TYPICAL SCHEMATIC REFRIGERATION PIPING OF TANDEM SCROLL CHILLERS.
MODEL : ACDS044DMN2x2

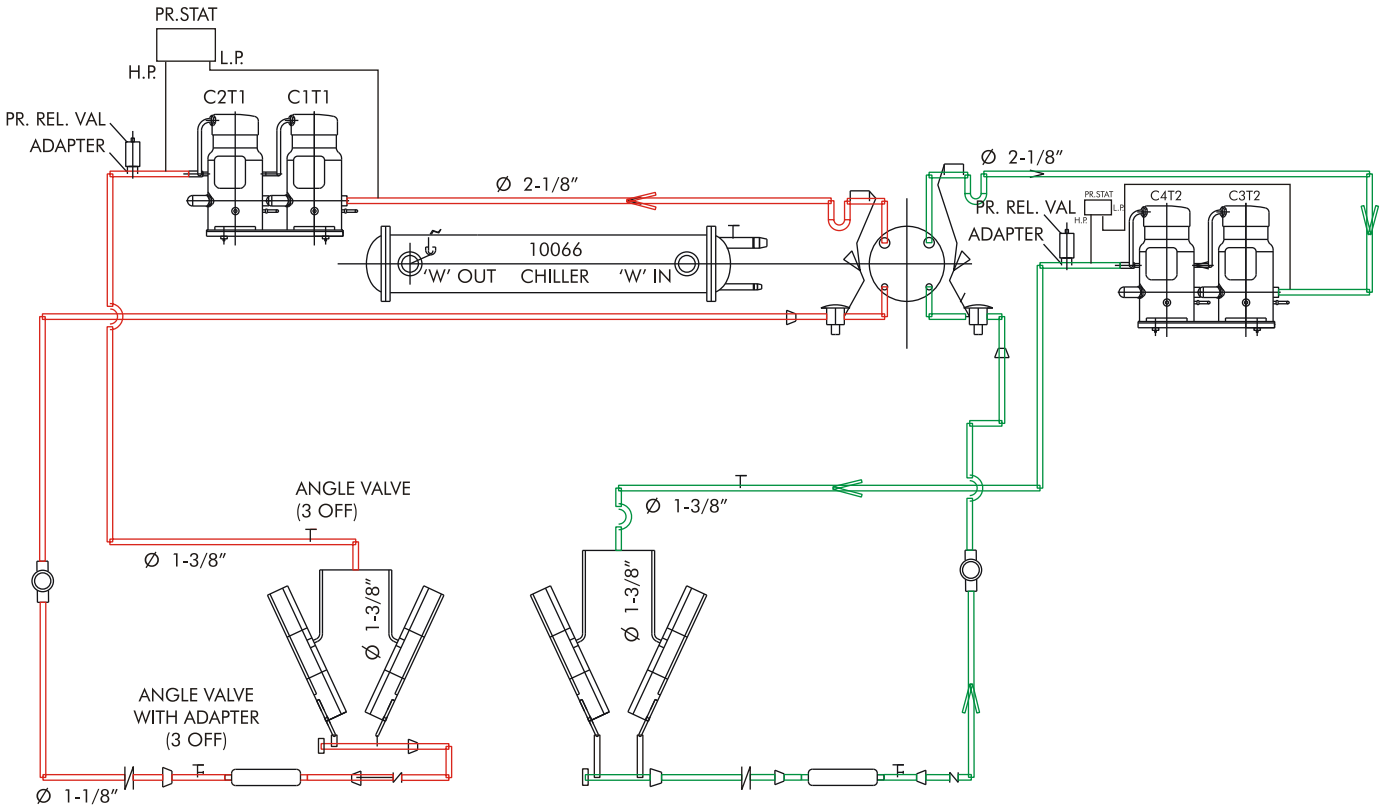

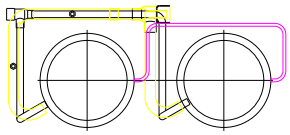

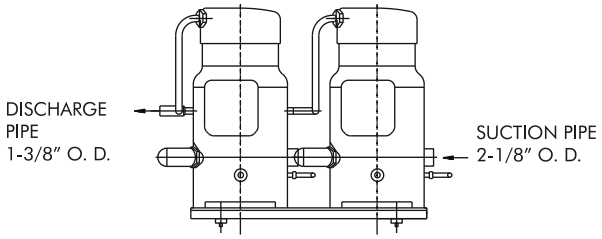

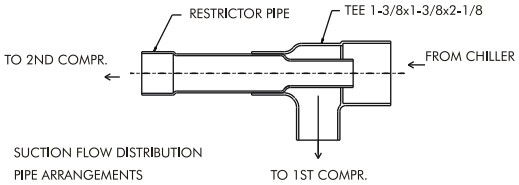

NOTES :

TOTAL REFRIGERATION CIRCUITS : 2 NOS.

SCROLL COMPRESSOR : 4 NOS. - SM185 (2 PER CKT.)

CHILLER 10066 : 1 NO. x 2 CIRCUITS

CONDENSER COIL : 9AV20 - 2 NOS.

POINT LOADING OF A/C SCROLL CHILLING PACKAGE

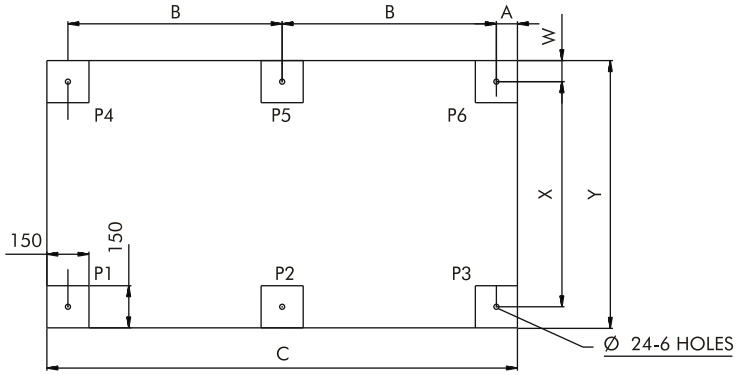

MODEL
ACDS11

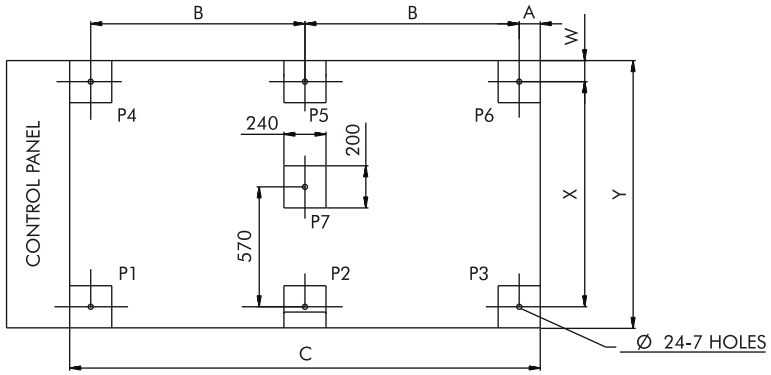

MODEL
ACDS22
ACDS33

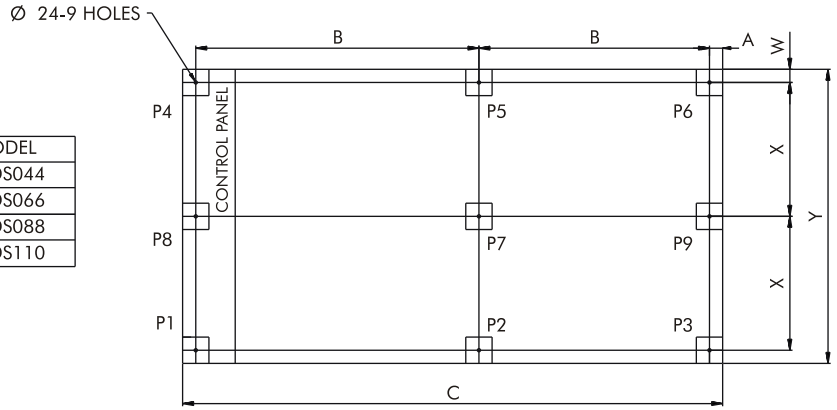

MODEL
ACDS044
ACDS066
ACDS088
ACDS110

MODEL	PAD LOCATION IN MM.						LOAD PER POINT - KG.								
	A	B	C	W	X	Y	P1	P2	P3	P4	P5	P6	P7	P8	P9
ACDS011DMN	75	1175	2500	75	400	550	190	190	180	240	190	220	-	-	-
ACDS022DMN	100	1018	2236	100	1070	1270	200	180	150	200	195	210	535	-	-
ACDS033DMN	100	1018	2236	100	1070	1270	325	180	170	335	280	260	640	-	-
ACDS044DMN2x2	100	1325	2850	100	1018	2236	300	300	300	300	300	300	400	300	300
ACDS066DMN3x2	100	1702.5	3605	100	1018	2236	450	450	450	450	450	450	450	425	425
ACDS088DMN4x2	100	1820	3804	100	1040	2280	660	660	660	660	660	660	720	660	660
ACDS110DMN5x2	125	2177	4604	125	1040	2280	700	700	700	700	700	700	750	700	700

GA DRAWING : ACDS011DMN

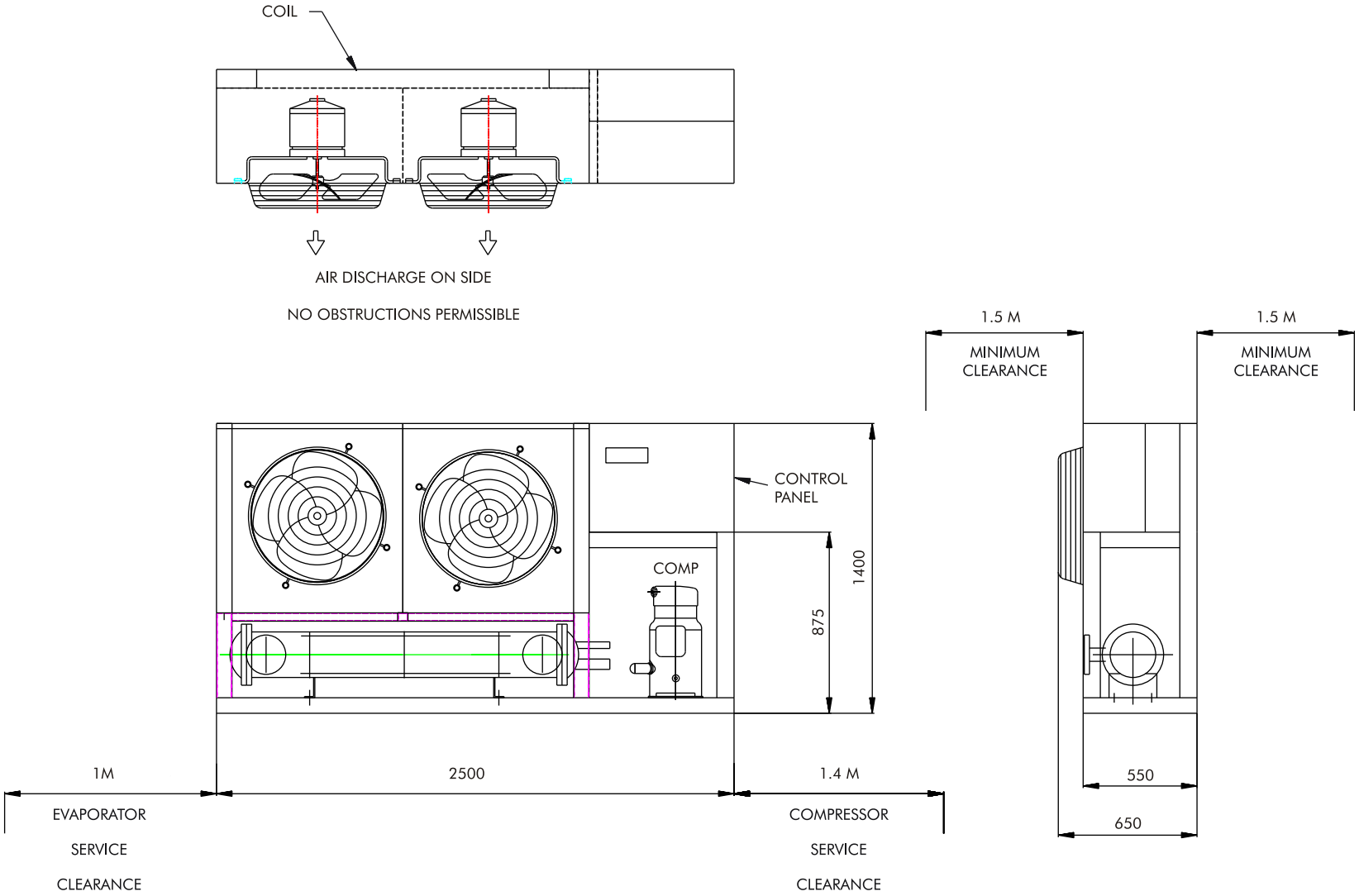

GA DRAWING : ACDS022DMN

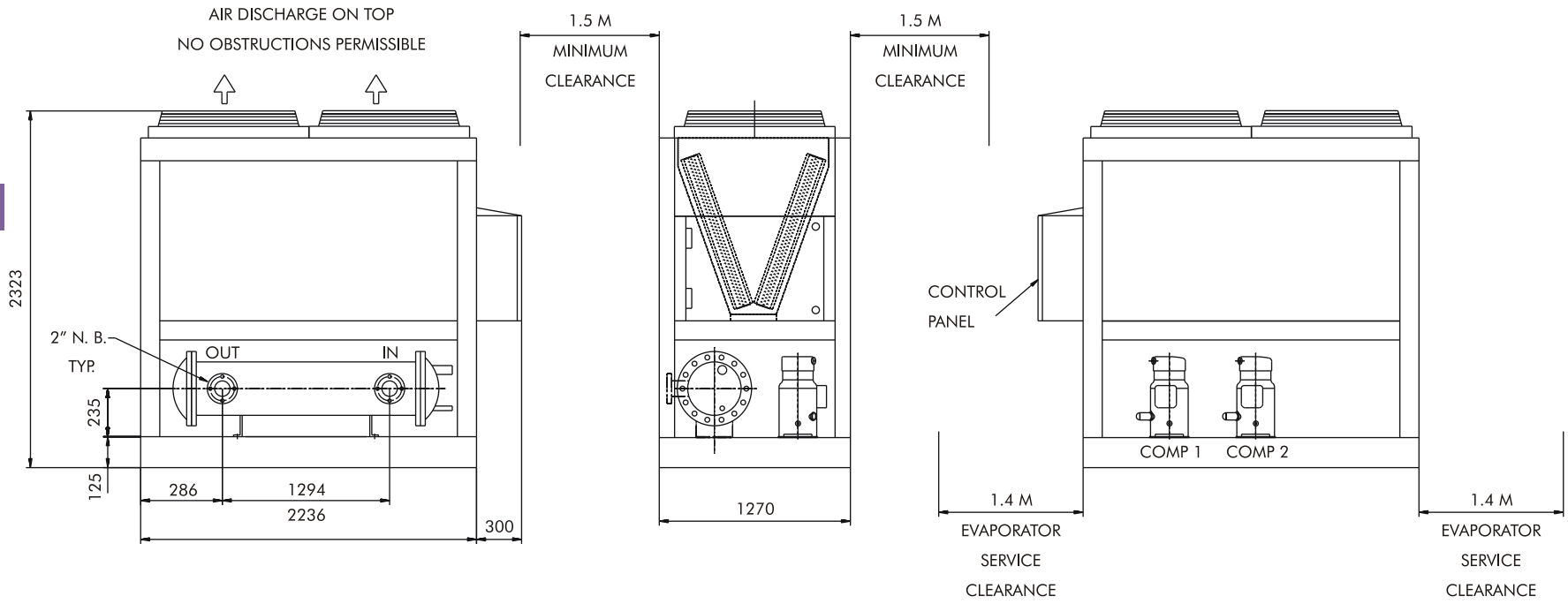

GA DRAWING : ACDS033DMN

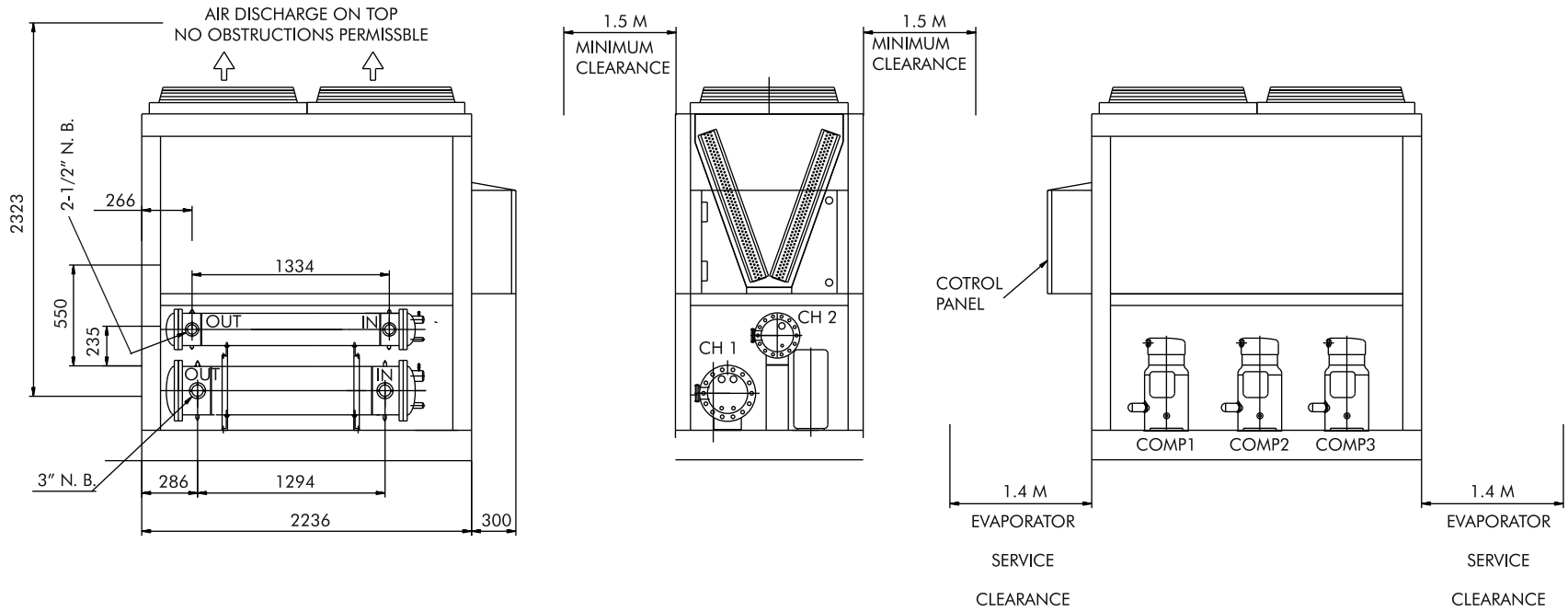

GA DRAWING : ACDS044DMN2x2

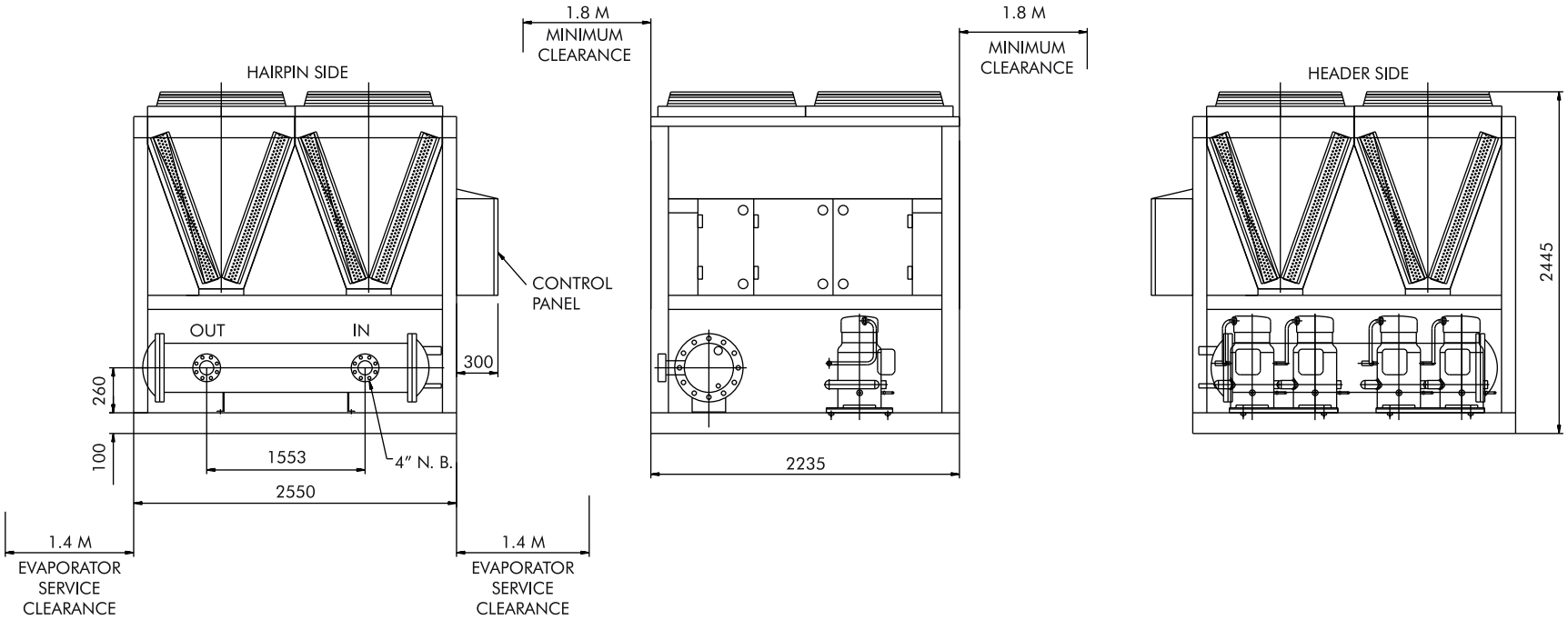

GA DRAWING :- ACDS066DMN3x2

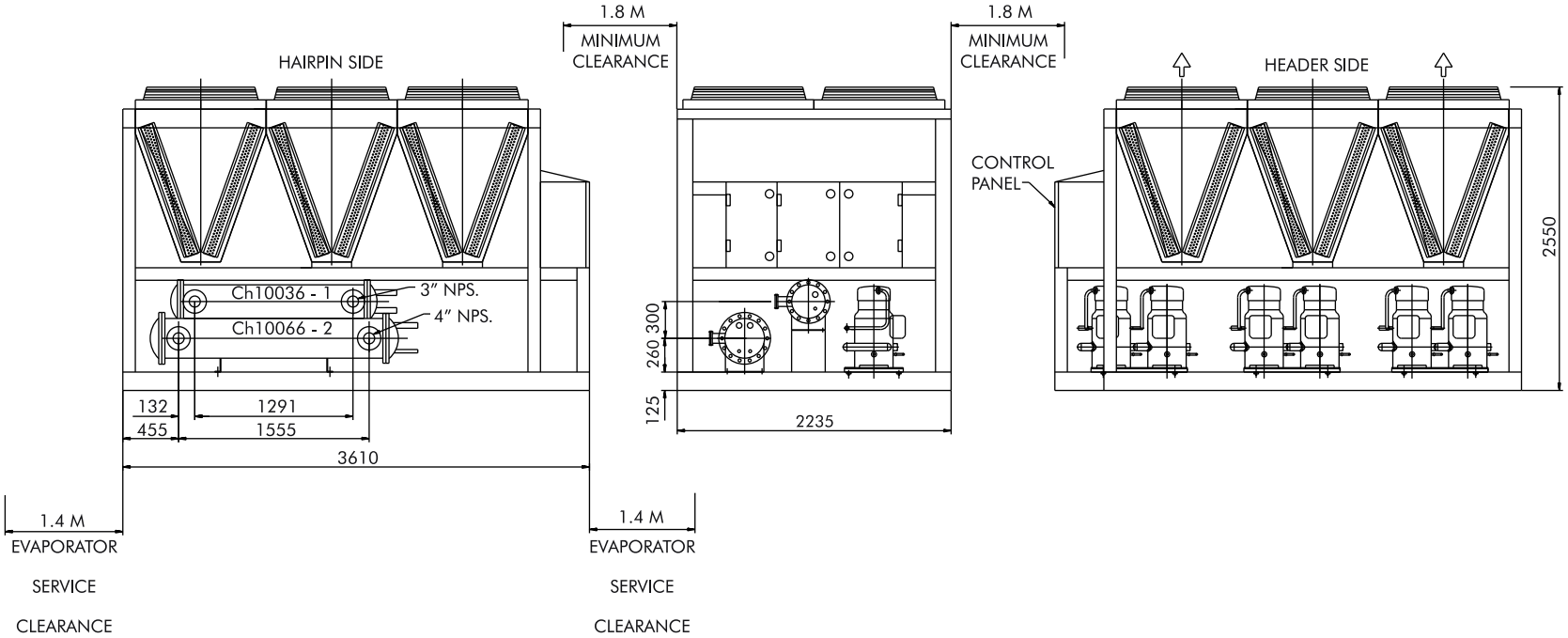

GA DRAWING :- ACDS088DMN4X2

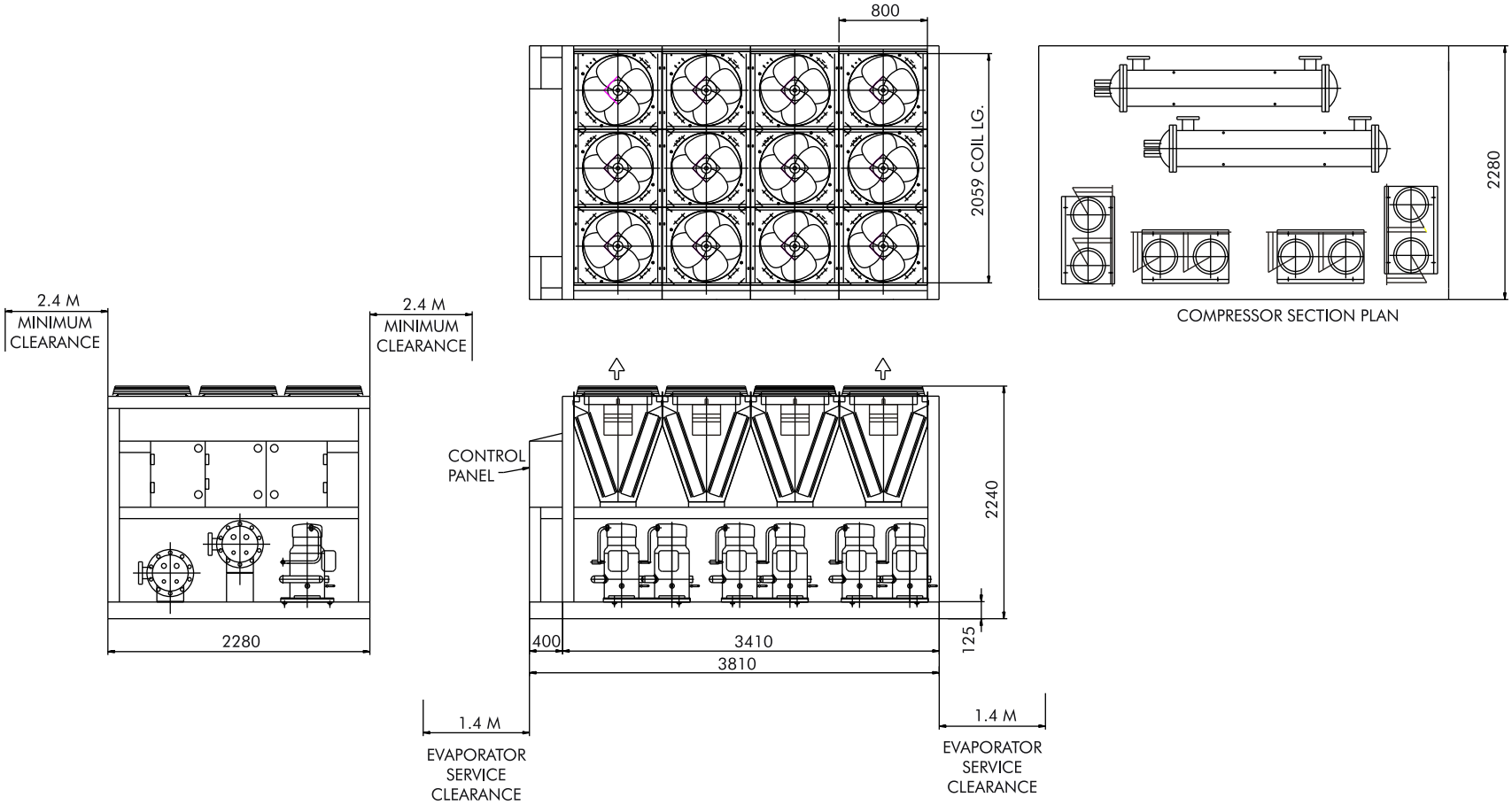

GA DRAWING : ACDS110DMN5x2

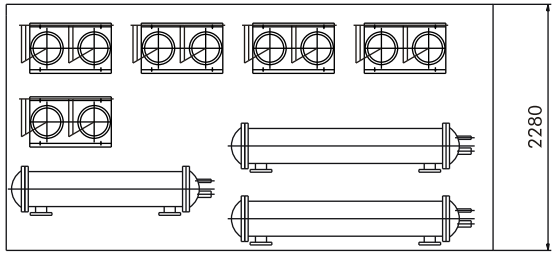

COMPRESSOR SECTION PLAN

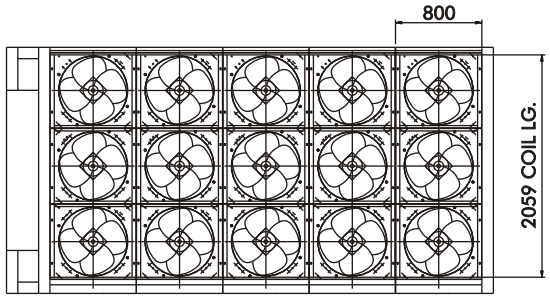

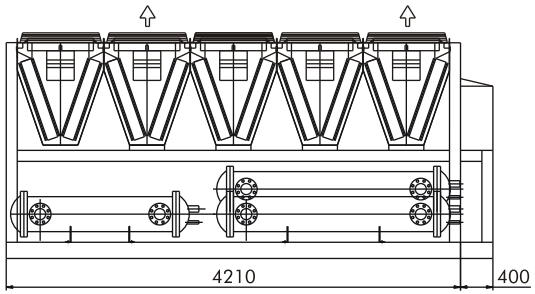

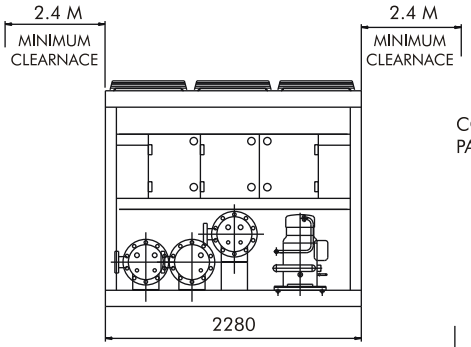

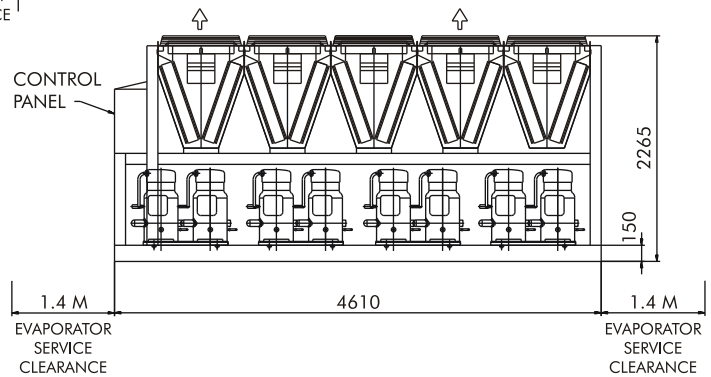

SYSTEM SETUP

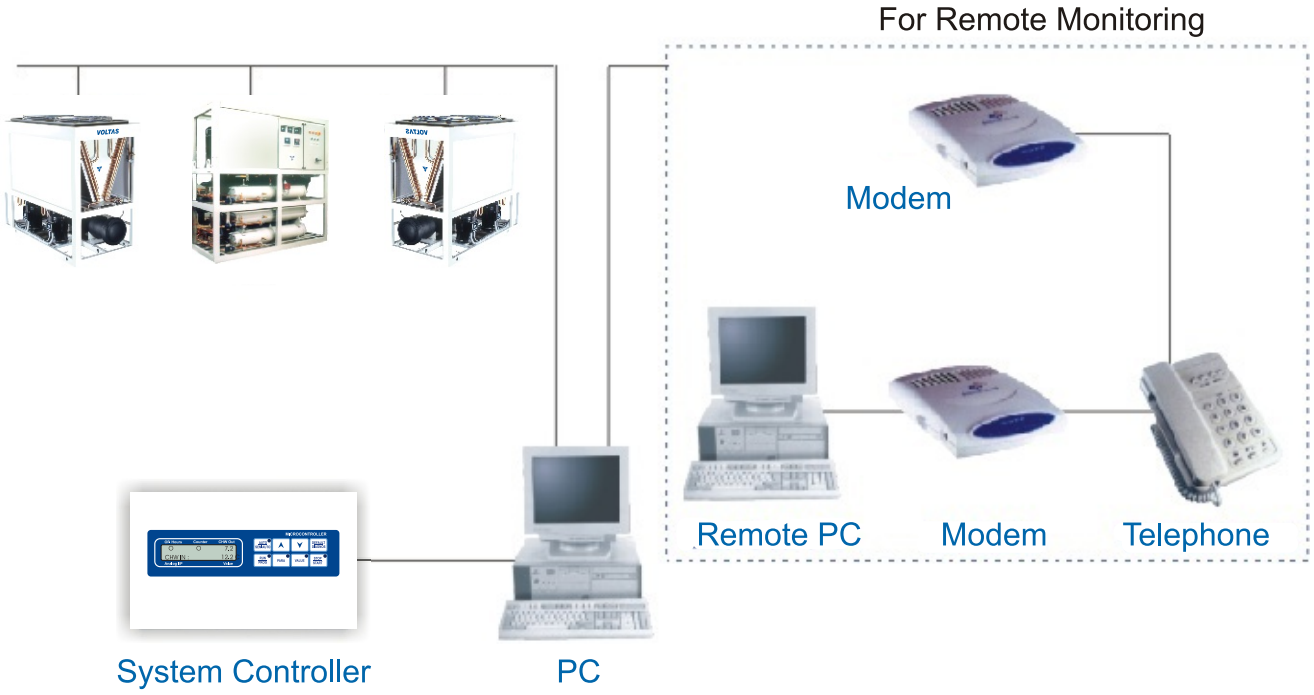

Graphical Display

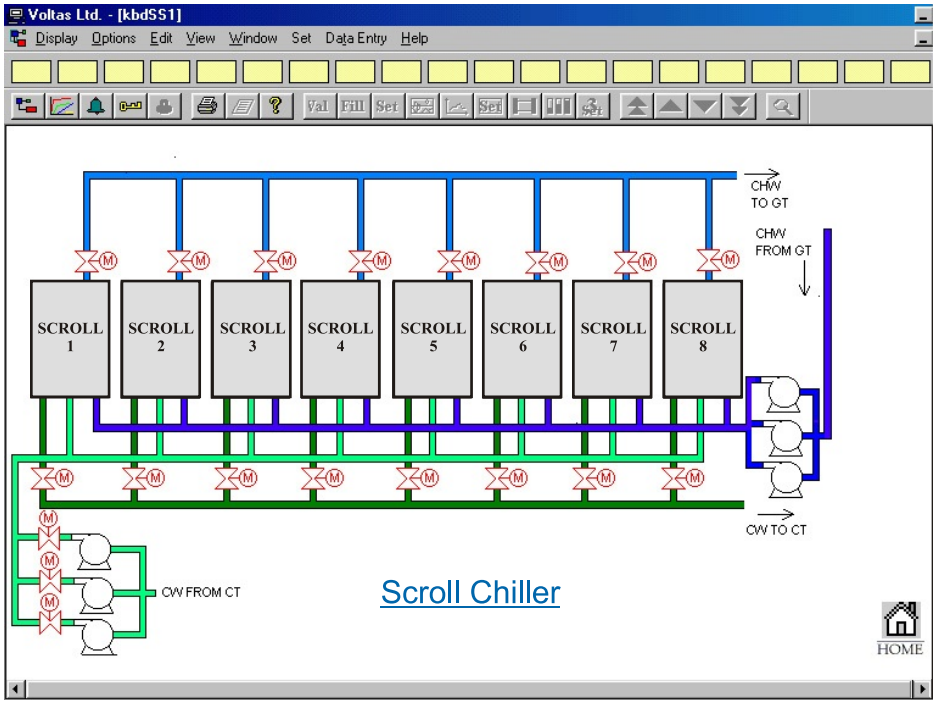

Scroll Chiller

VSCADA- Voltas Supervisory Control & Data Acquisition

This is a system, which links machines to computers and monitors operating parameters of chillers, pumps, AHUs etc.

Features

Control Function	Remote on/off of chillers and other equipment, sequencing of chillers & other equipment, ensure equal run hours, optimum starting & stopping of chillers as per load variation.
Plant Viewer	Live Mimic of full plant i.e. all chillers, fans, AHUs, pumps, cooling towers, motorised valves etc, giving online Real Time data.
Chiller Viewer	Live mimic of individual chiller with chilled water / outlet temperature; no. of load/unload stages; compressor operating hours, on/off status of safeties, motors, compressor, motorized valves of chillers.
Set Point Changing	Value of various set points can be changed through keyboard.
Log Viewer	Data logging of above analog inputs, as storage in hard disk of PC or print form.
Alarm Viewer	Gives the list of alarms with cause of tripping, date, time.
Protection by Password	Password protection for prevention of unauthorized or unwanted access.
Remote Access	Remote monitoring facility with PSTN (Public switching telephone network) (Optional)
Open System	Standard system is with MODBUS ASCII Protocol. Capable of working with variety of protocols, supports Ethernet /TCPIP,
Graphic Interface	Friendly and easy to operate.
Graphic Engineering	The graphics package defines ability to define lines, boxes, circles, and arcs, free hand displays. It also allows to define points on the graphics where real time field data is displayed. Colours of symbols can be changed.

NORTHERN REGION

OFFICE	TELEPHONE	FAX
DELHI (Branch)	(011)55505550 (011)55505570	(011)26950022 (011)26950081
Chandigarh	(0172)2663669	(0172)2604625
Gurgaon	(0124) 5060504	
Jaipur	(0141)5179983	(0141)5179983
Ludhiana	(0161)2500223	
LUCKNOW (Branch)	(0522)2238538 (0522)2237869	(0522)2238532
Dehradun	(0135)2750401	

WESTERN REGION

OFFICE	TELEPHONE	FAX
AHMEDABAD (Branch)	(079)55301100 (079)25602835	(079)55301180 (079)55301190
Ankleshwar	(02646)238199	
Rajkot	(0281)2578124	
Silvassa	(0260)2640363	
Surat	(0261)2422761	(0261)2412824
Vadodra	(0265)2351706	(0261)2332098
MUMBAI (Branch)	(022)56656754-61 (022)56656783-85	(022)56656797 (022)56656768
Goa	(0832)2463664	
Indore	(0731)2498616	
Nagpur	(0712)5618846	
Nashik	(0253)2455169	
PUNE (Branch)	(020)56025600 (020)56046602	(020)56046600 (020)56046601
Aurangabad	(0240)2320510	

EASTERN REGION

OFFICE	TELEPHONE	FAX
JAMSHEDPUR (Branch)	(0657)2431062 (0657)2434322	(0657)2432201
Patna	(0612)2232717	
Raipur	(0771)5059303	
KOLKATA (Branch)	(033)22540234 (033)22540300	(033)22300108
Guwahati	(0361)2463073	

SOUTHERN REGION

OFFICE	TELEPHONE	FAX
BANGALORE (Branch)	(080)22275150 (080)22273691	(080)22270172 (080)22998508
Mangalore	(0824)2453316	
CHENNAI (Branch)	(044)55510666 (044)55510669	(044)24342178
Coimbatore	(0422)2211188	(0422)2211188
Madurai	(0452)2535818	
HYDERABAD (Branch)	(040)55208100 (040)55208103	(040)55203882
Vijaywada	(0866)2435282	(0866)2431507
Visakhapatnam	(0891)2754051	(0891)2562096
KOCHI (Branch)	(0484)2359621 (0484)2359648	(0484)2357129
Calicut	(0495)2770503	
Thiruvananthapuram	(0471)2338873	

Backed by: Voltas countrywide after sales service.

VOLTAS LIMITED

Air Conditioning & Refrigeration Business Group

Voltas House 'B', T. B. Kadam Marg, Chinchpokli, Mumbai 400 033.

Visit us at : www.voltasacnr.com

A TATA Enterprise

(Product development is a continuous process in Voltas, hence specifications and technical data are subject to alterations without notice.)

AC & R/CHP-05/0605